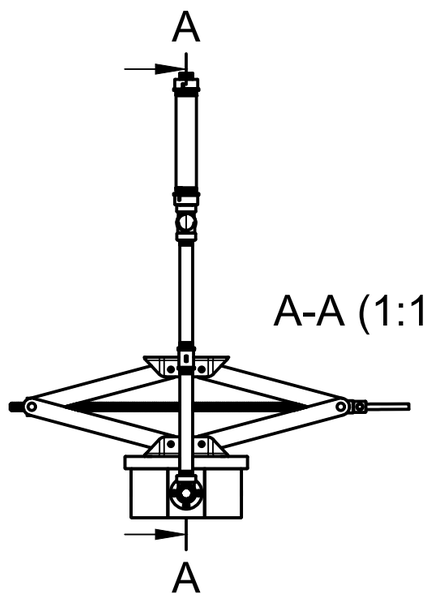

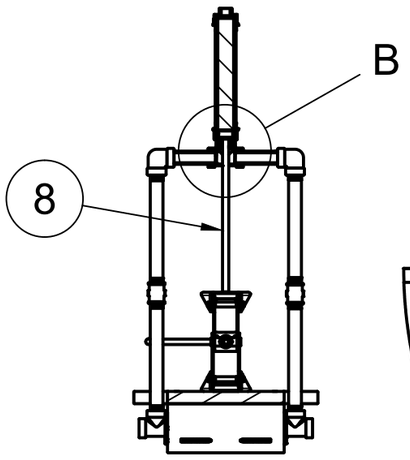

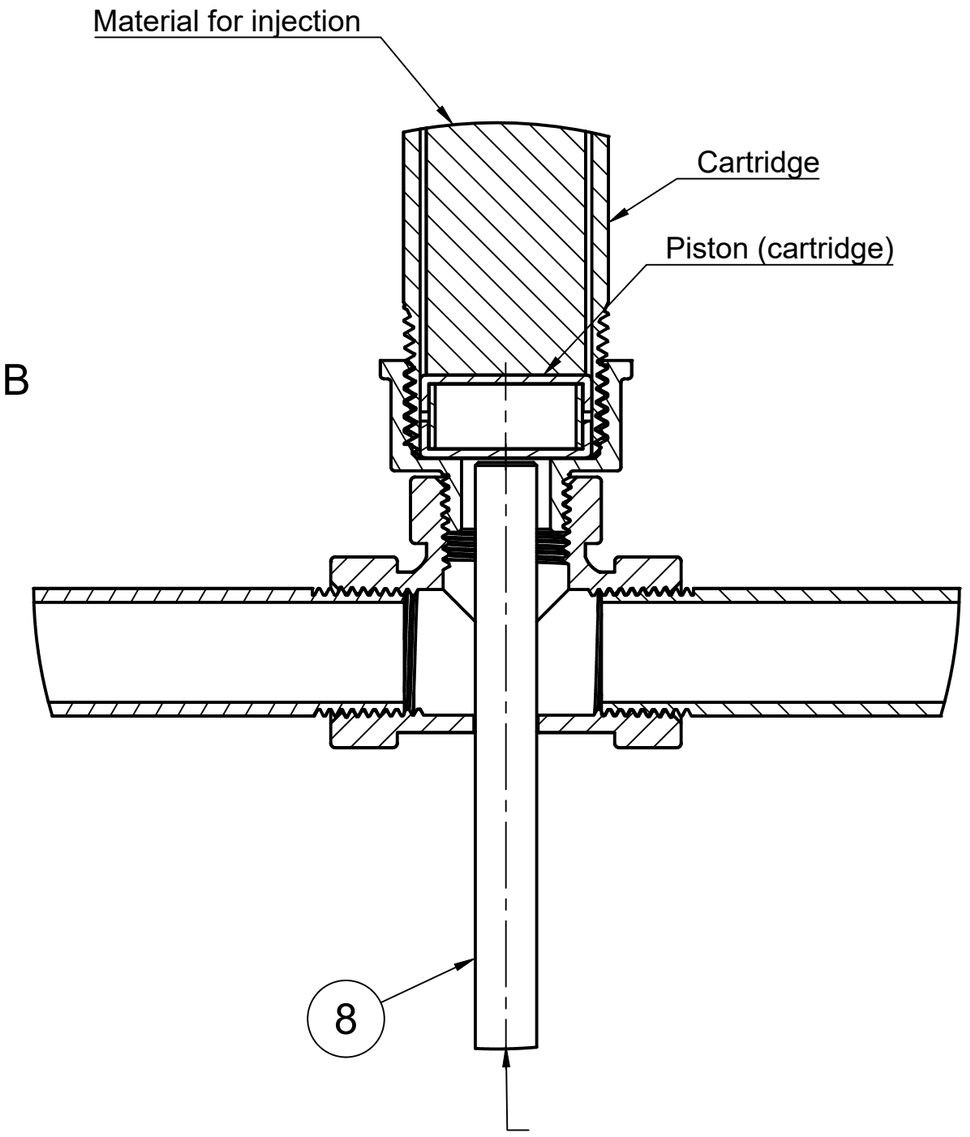

Dept.	Technical reference	Created by	Approved by
		Marco Bernardo 01.11.2023	
		Document type	Document status
		Title	DWG No.
		S005-INJ-202212132	
		Rev. / Date of issue	Sheet
			1/2

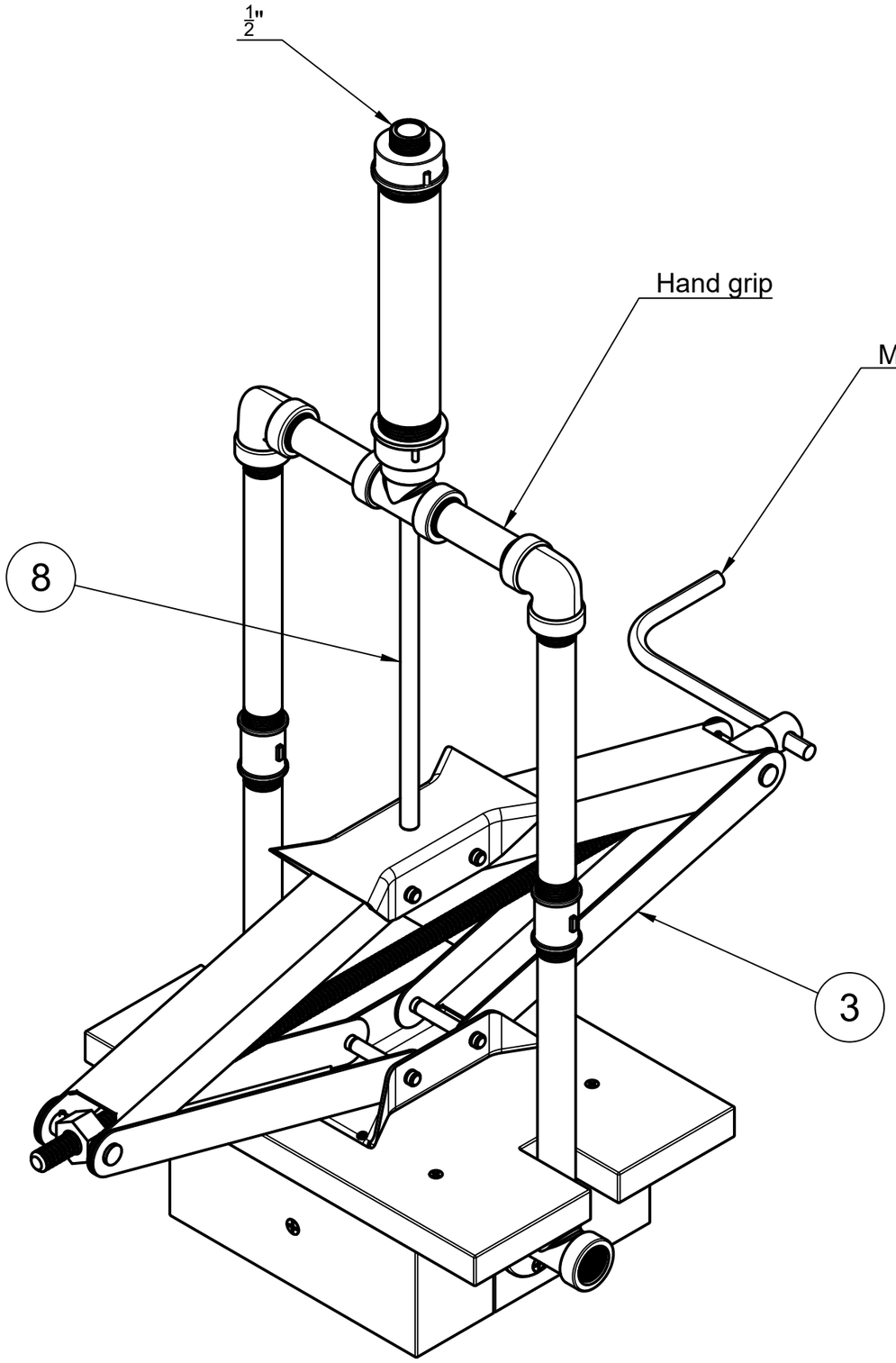

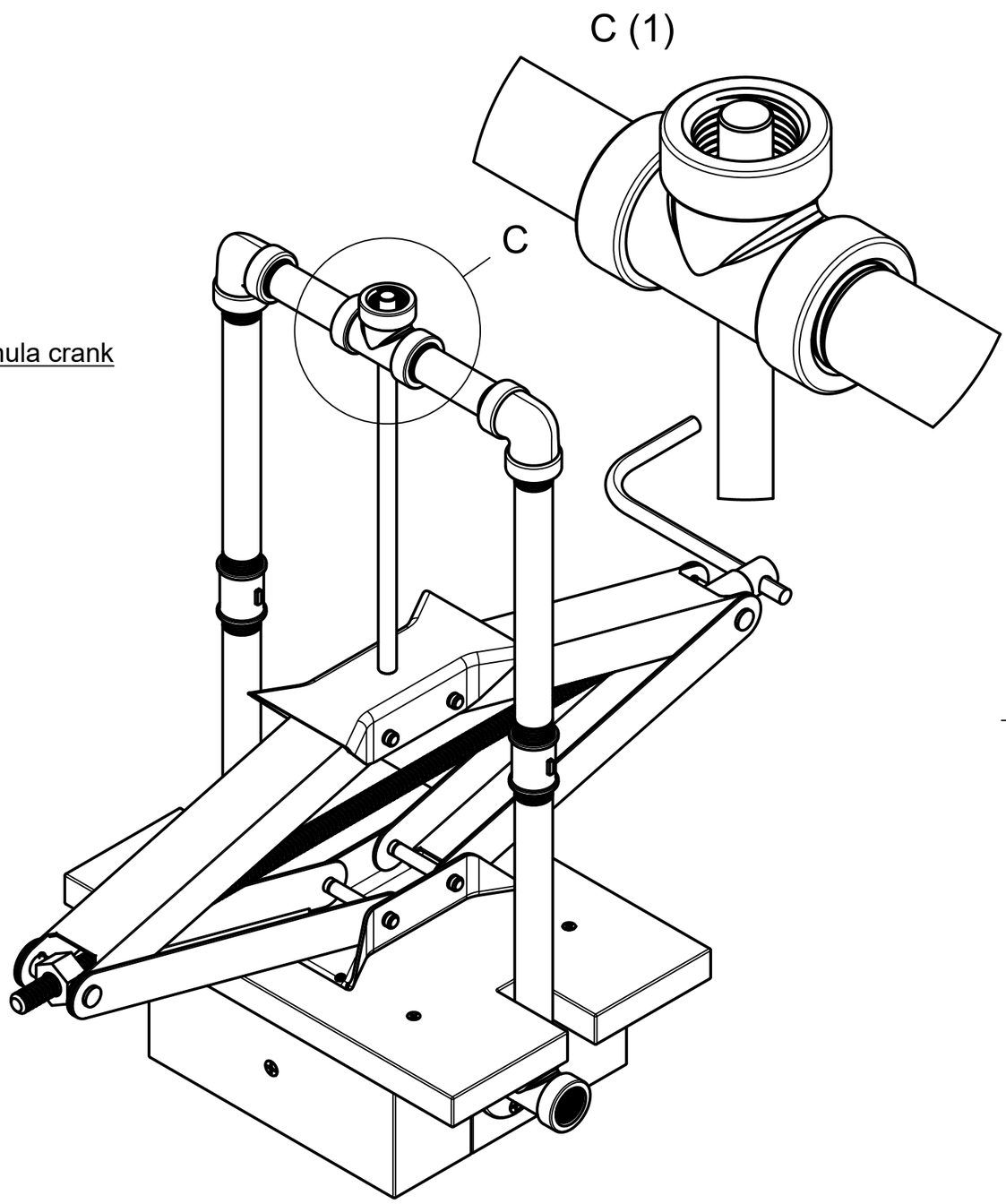

Dept.	Technical reference	Created by	Approved by
		Marco Bernardo 01.11.2023	
		Document type	Document status
		Title	DWG No.
		S005-INJ-202212132	
		Rev. / Date of issue	Sheet
			2/2